S018X

MANUAL



Parts List

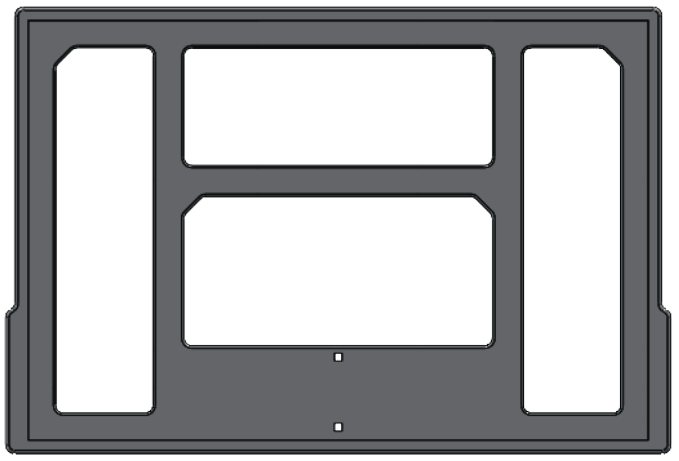

1

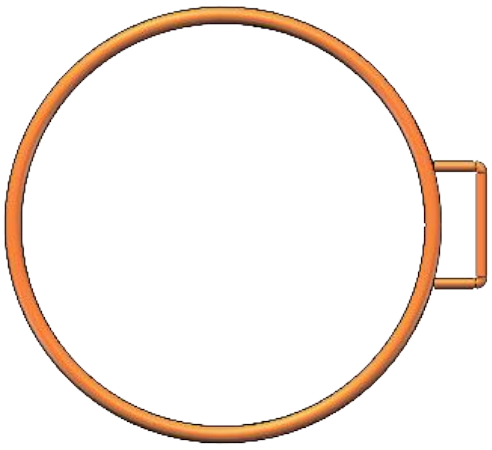

2

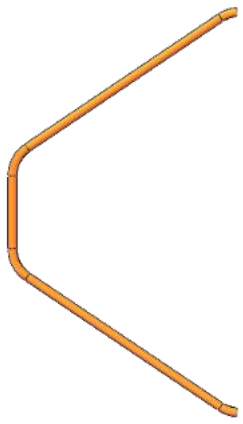

3

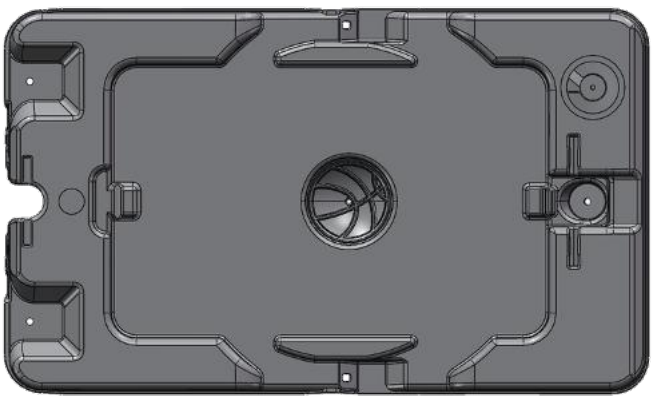

4

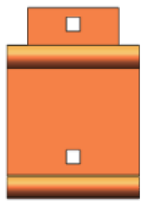

5

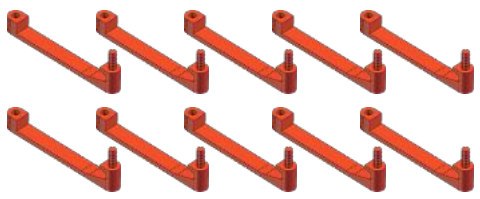

6



W



X



Y

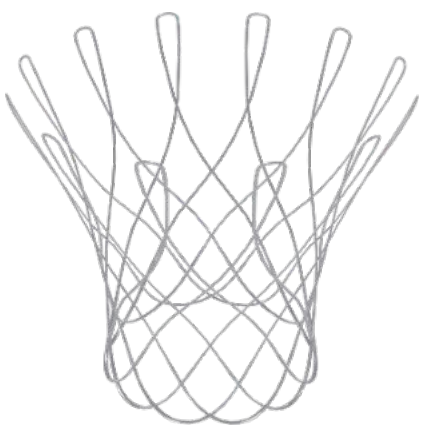

7

Parts List

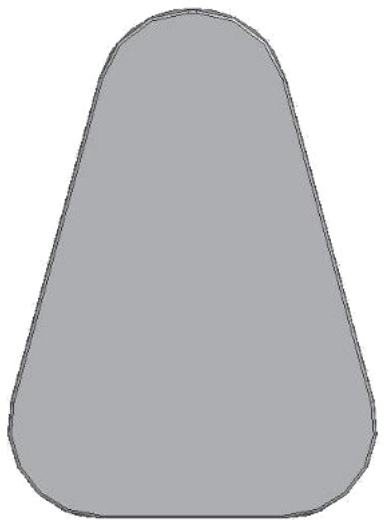

8

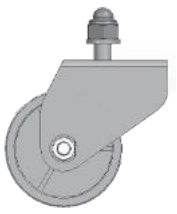

9

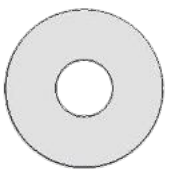

10
1PC



11L 11R



12

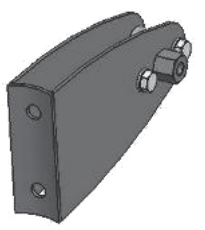

13



14
M8*50MM
2PCS



15
M8*55MM
1PC



16
M8*50MM
2PCS



17
M8*130MM
1PC



18
M8*130MM
2PCS



19
M8*130MM
2PCS

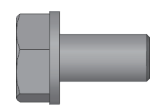

M8*16MM
2PCS
20



M8*30MM
2PCS
21



M8*25MM
1PC
22

25



26



23



24

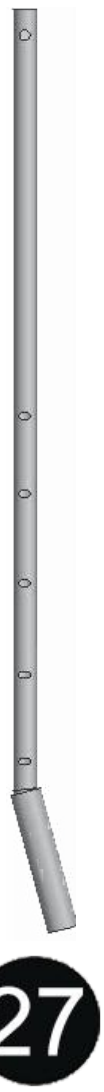

27



28



29

INSTALLATION STEPS

Needed parts

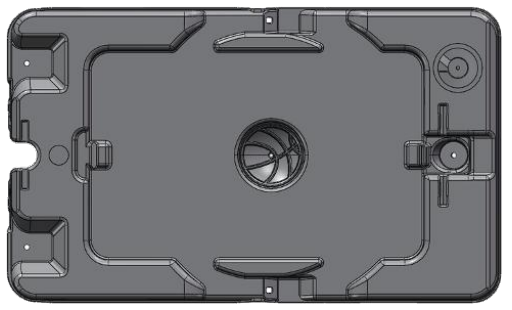

4

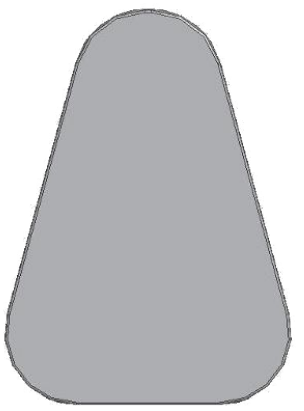

8



11L 11R



15

M8*55MM



22

M8*25MM
1PC

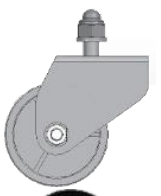

9

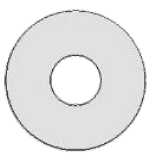

10



Y

25

STEP1

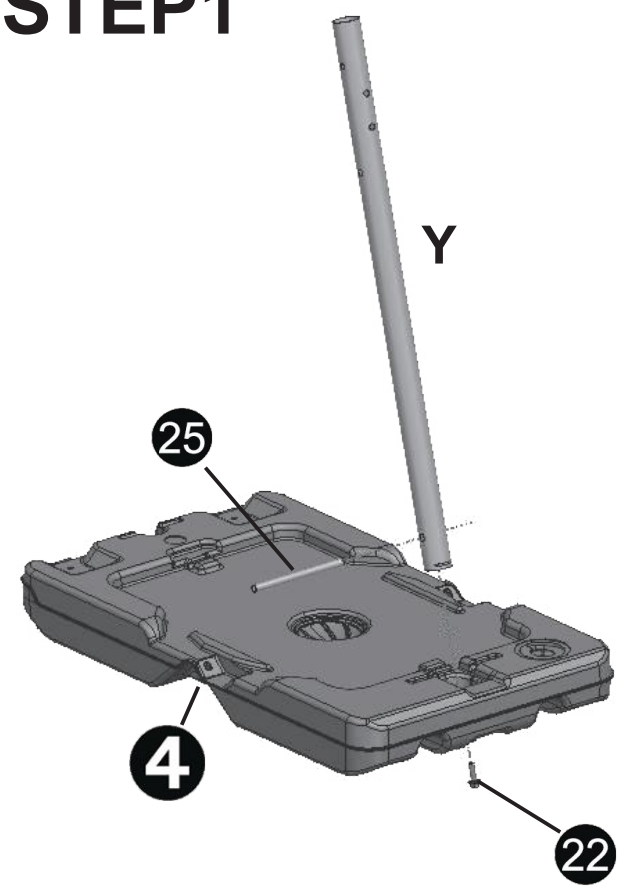

STEP2

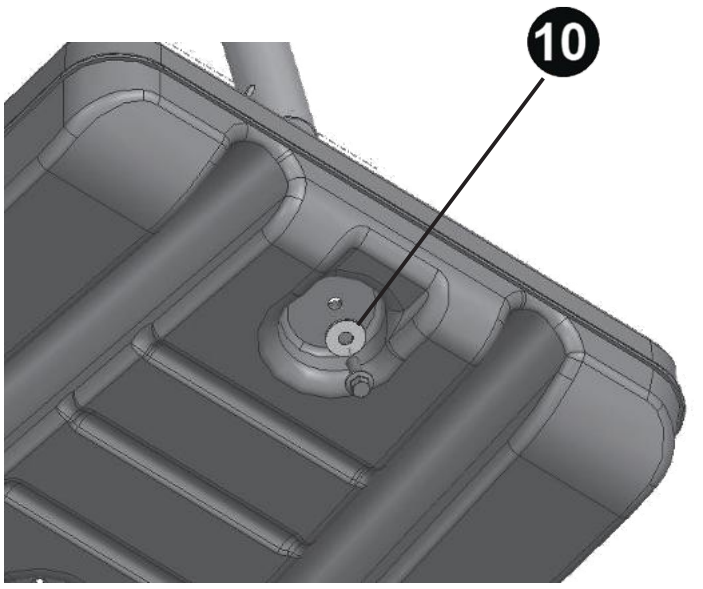

INSTALLATION STEPS

STEP3



STEP4

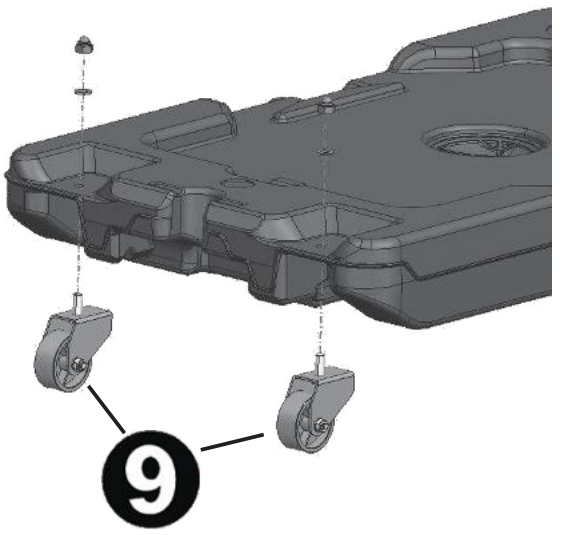

STEP5

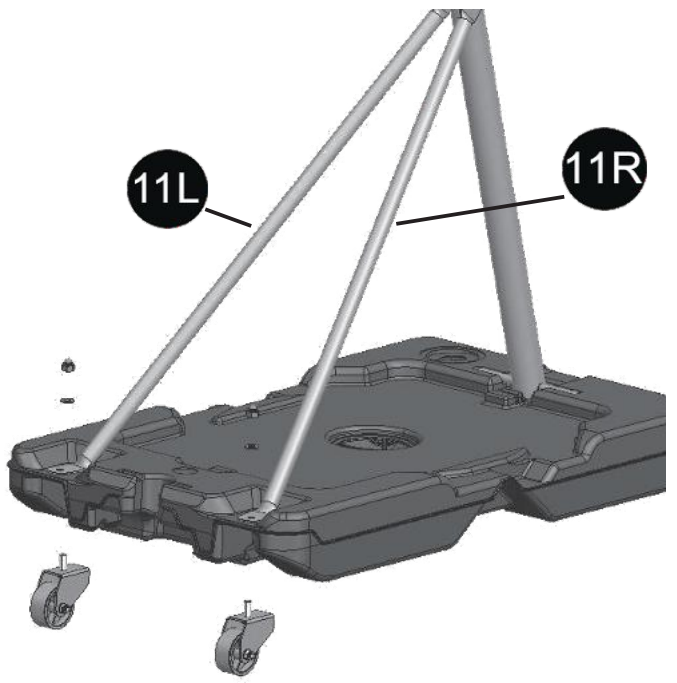

STEP6

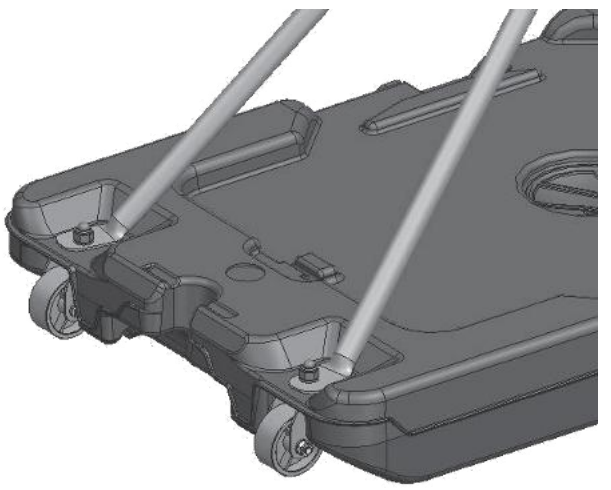

INSTALLATION STEPS

STEP7



STEP8

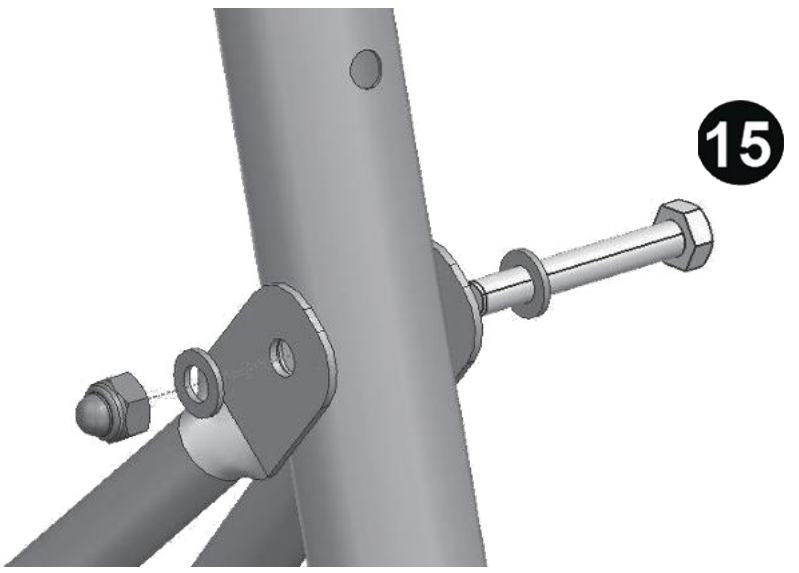

STEP9

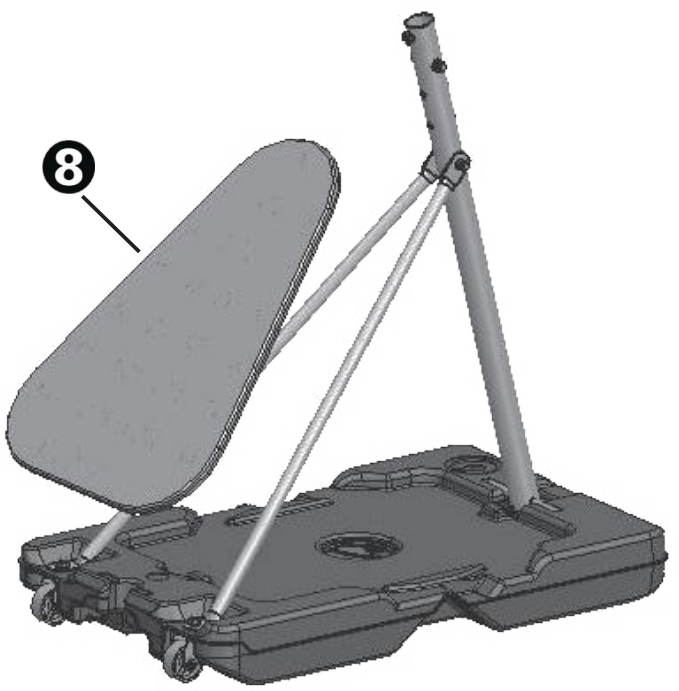



INSTALLATION STEPS

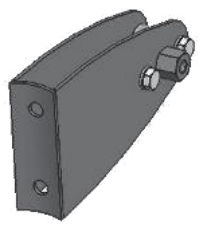

13



12



23



24



X



14

M8*50MM



16

M8*50MM

STEP10

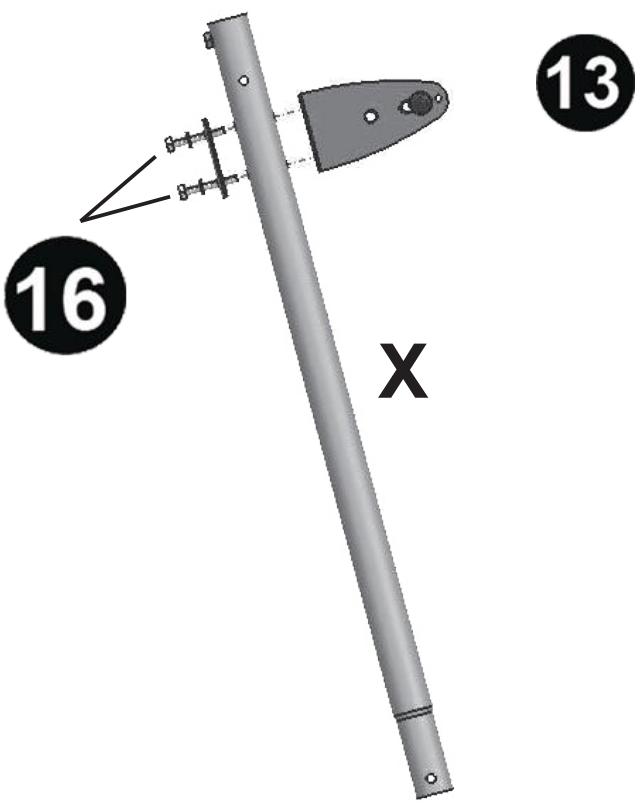

STEP11

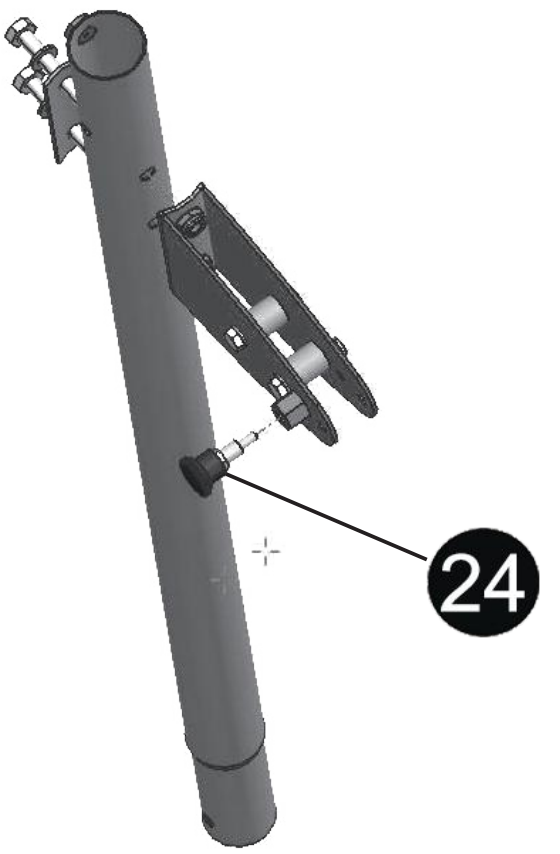

INSTALLATION STEPS

STEP12

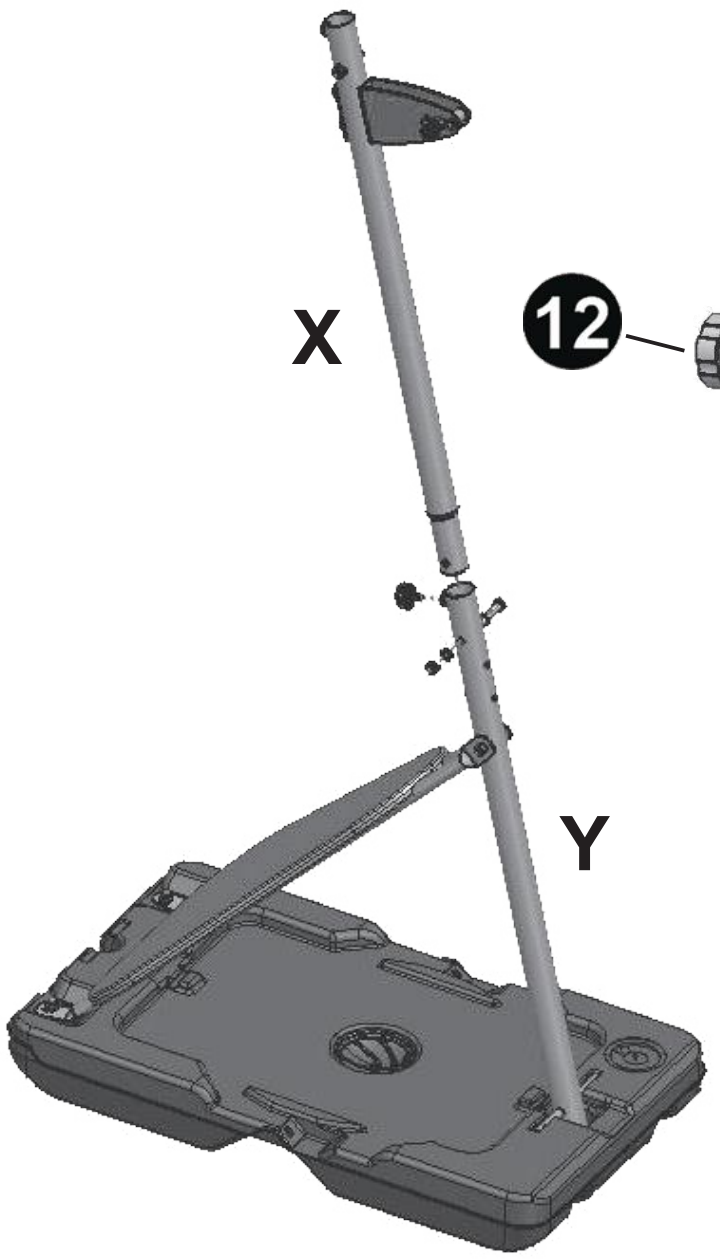

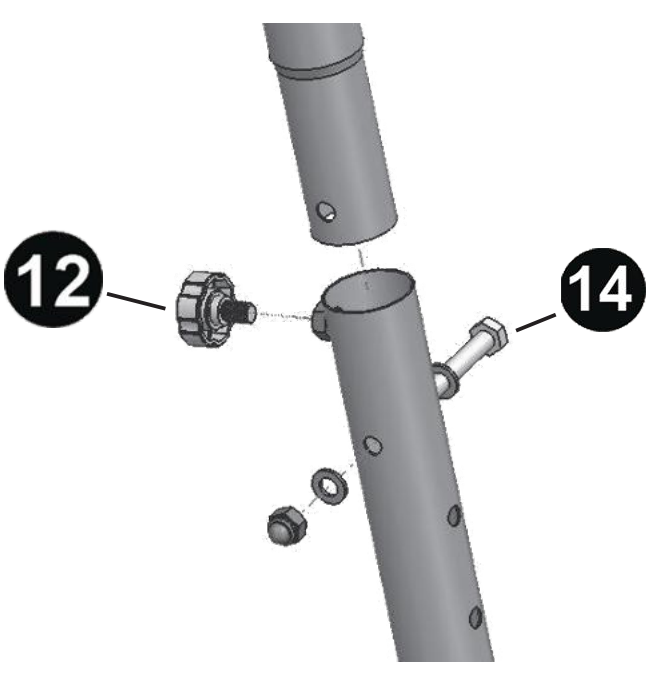

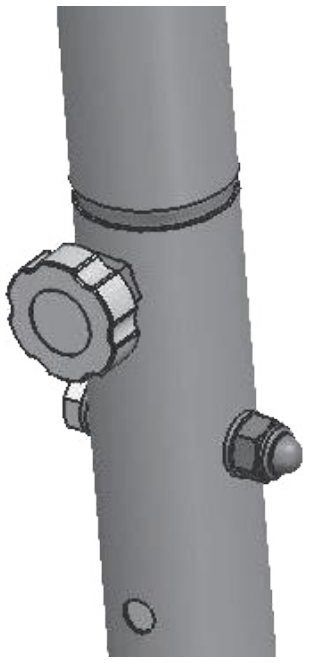

STEP13





INSTALLATION STEPS

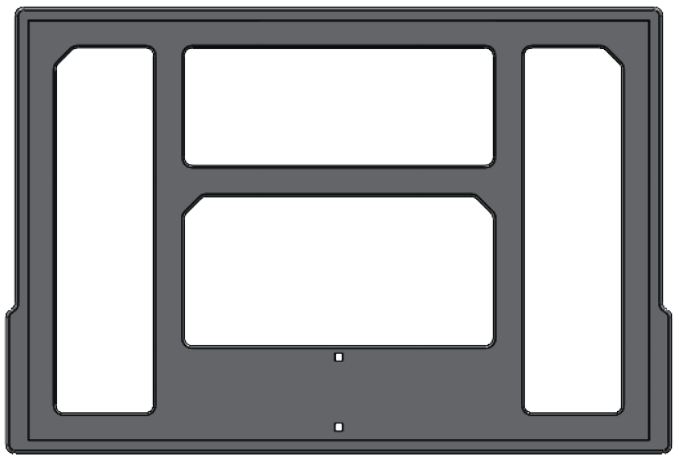

1

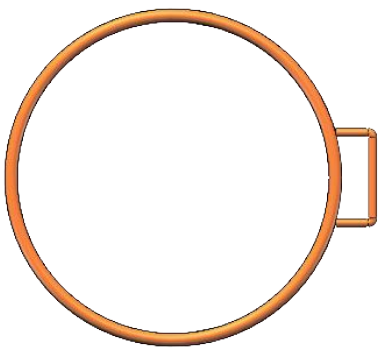

2

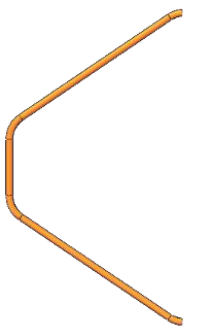

3

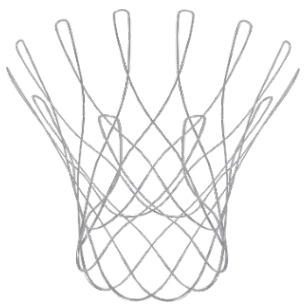

7

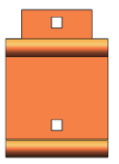

5

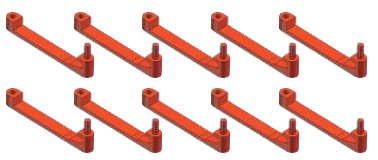

6

STEP1

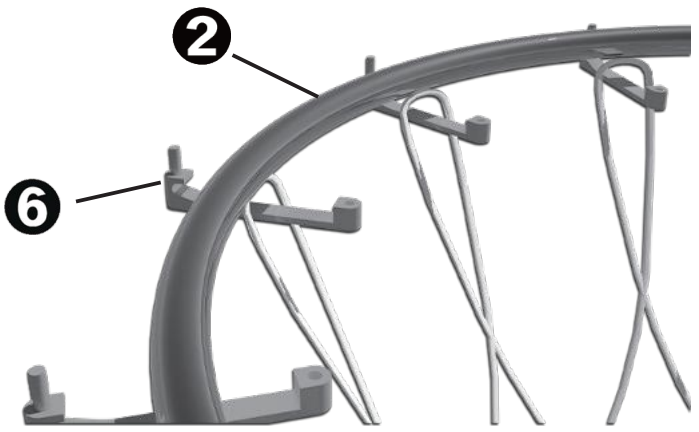

STEP2

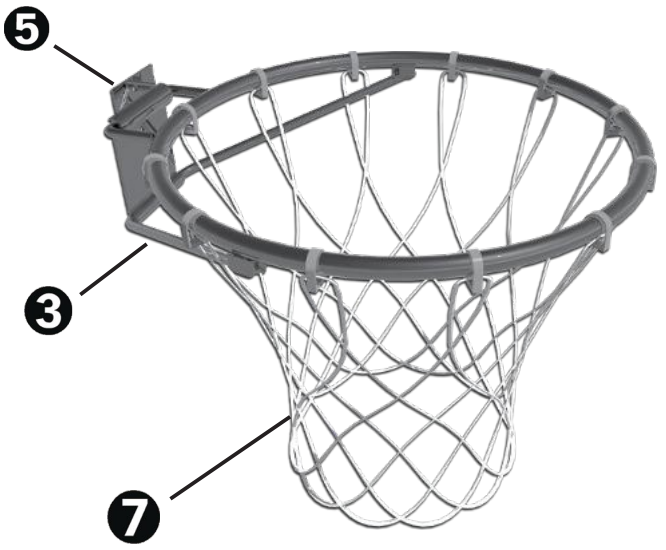

INSTALLATION STEPS



W



14

M8*50MM



12

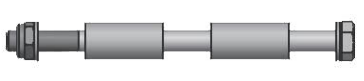

17

M8*130MM
1PC

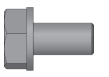

20

M8*16MM
2PCS



18

M8*130MM
2PCS



21

M8*30MM
2PCS



19

M8*130MM
2PCS



26



27



28



29

STEP1

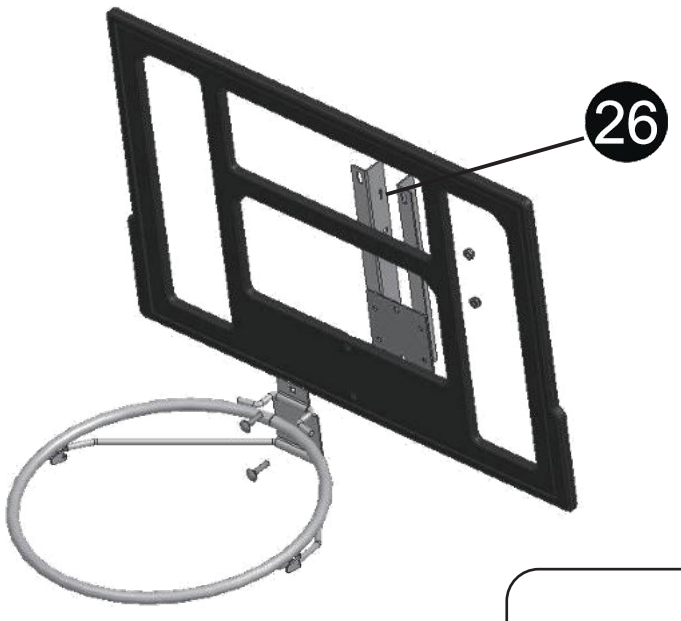

26

STEP2

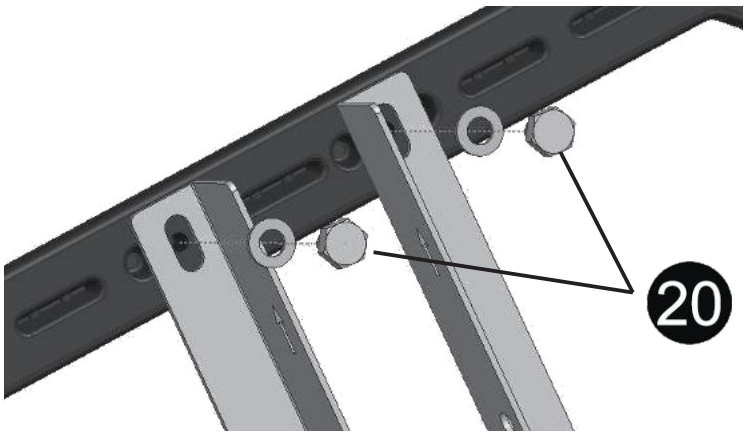

20

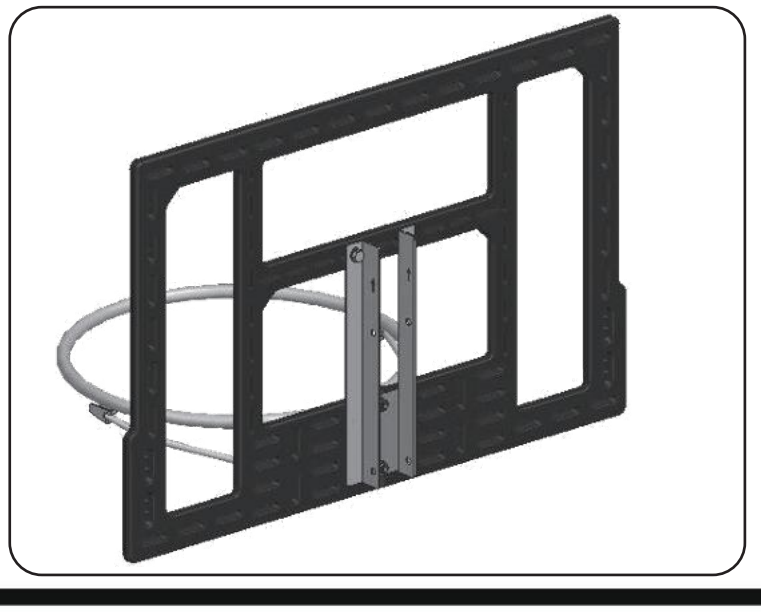

INSTALLATION STEPS

STEP3

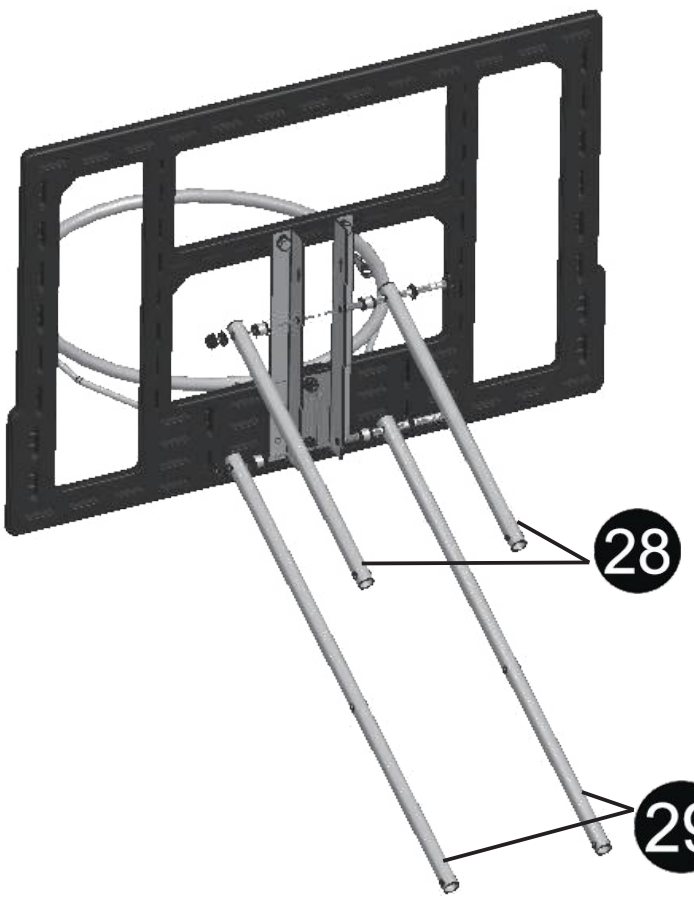

STEP4

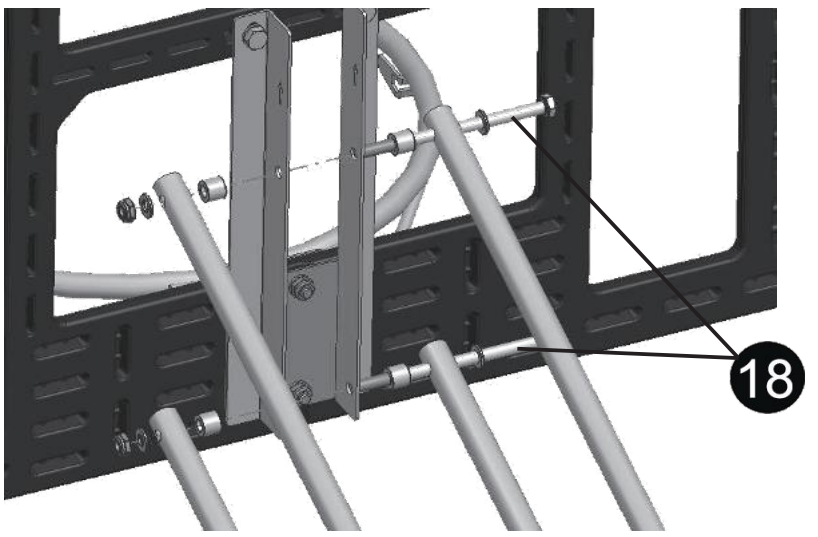

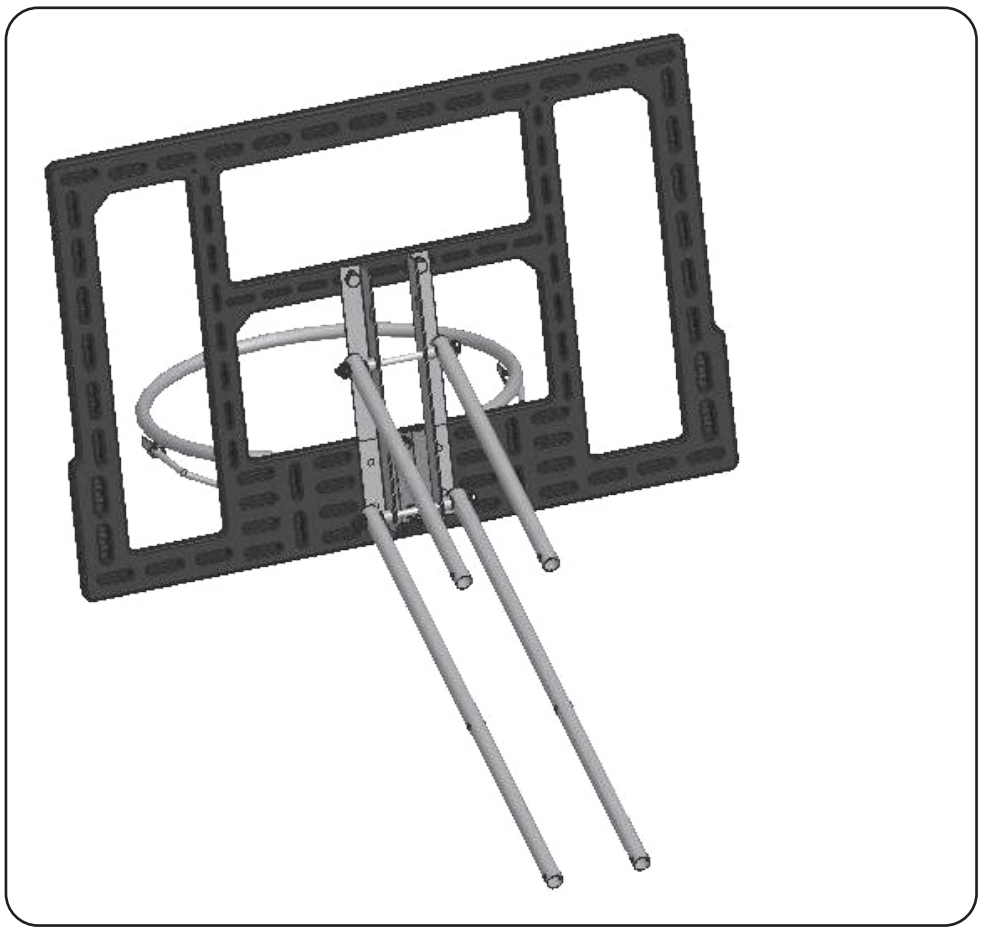

INSTALLATION STEPS

STEP3

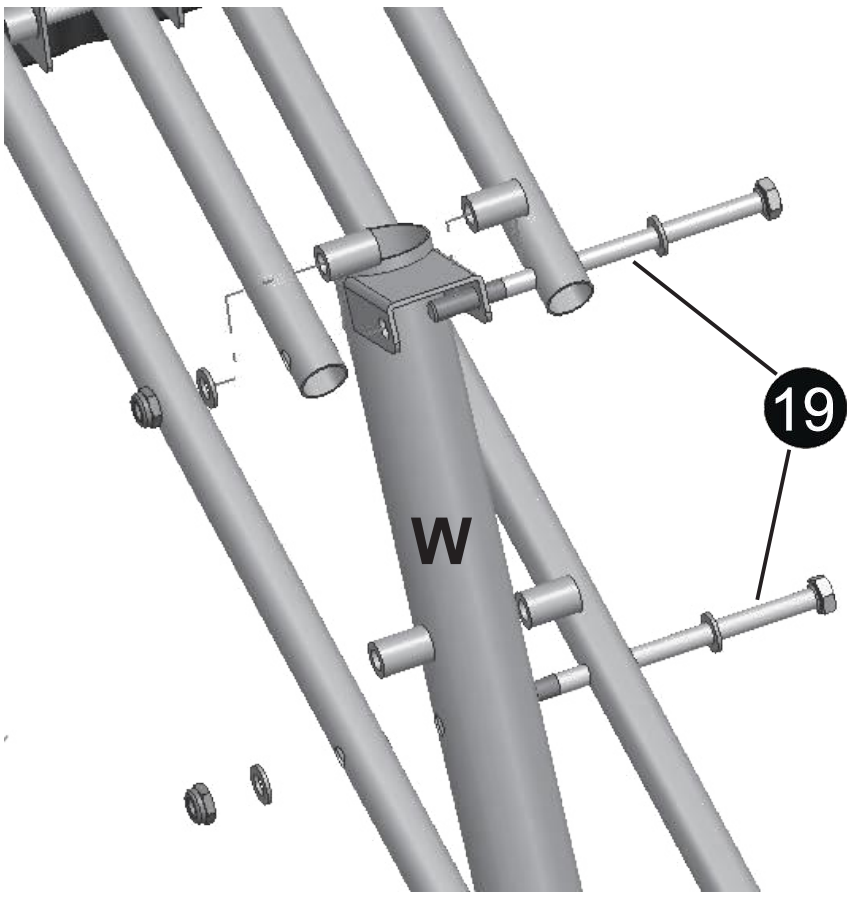

STEP4





INSTALLATION STEPS

STEP3

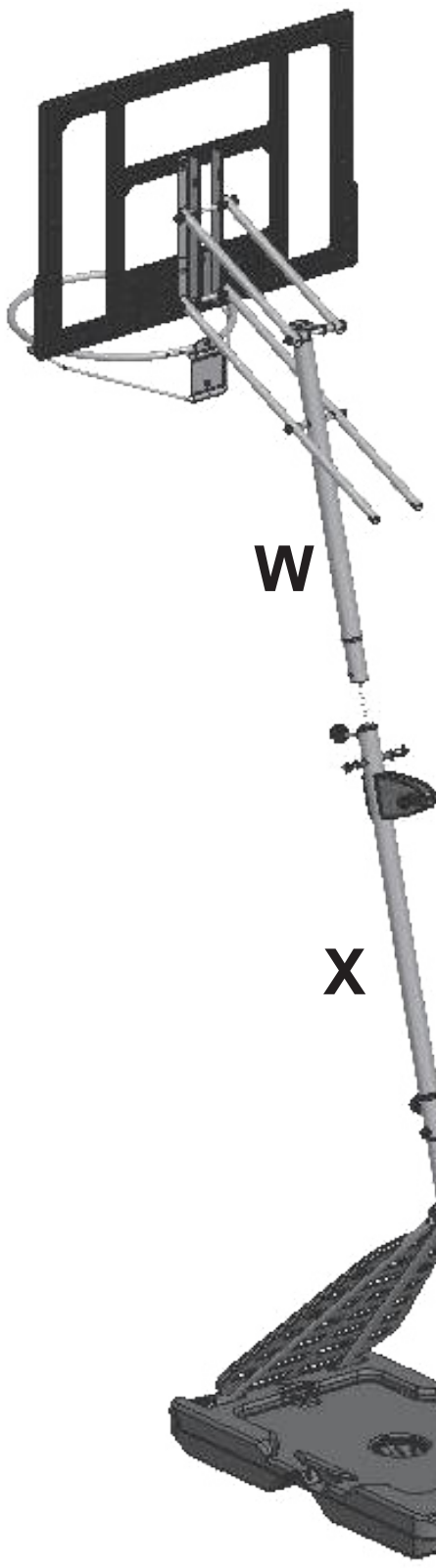

STEP4

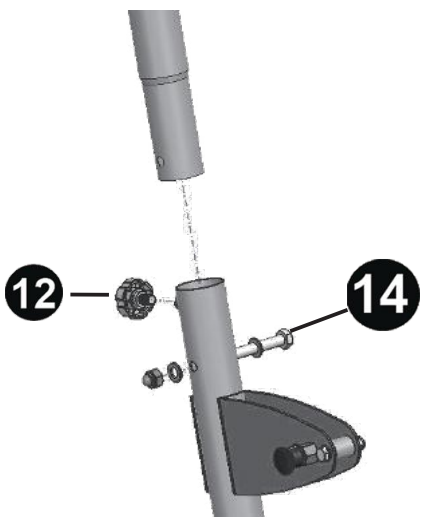



INSTALLATION STEPS

STEP5

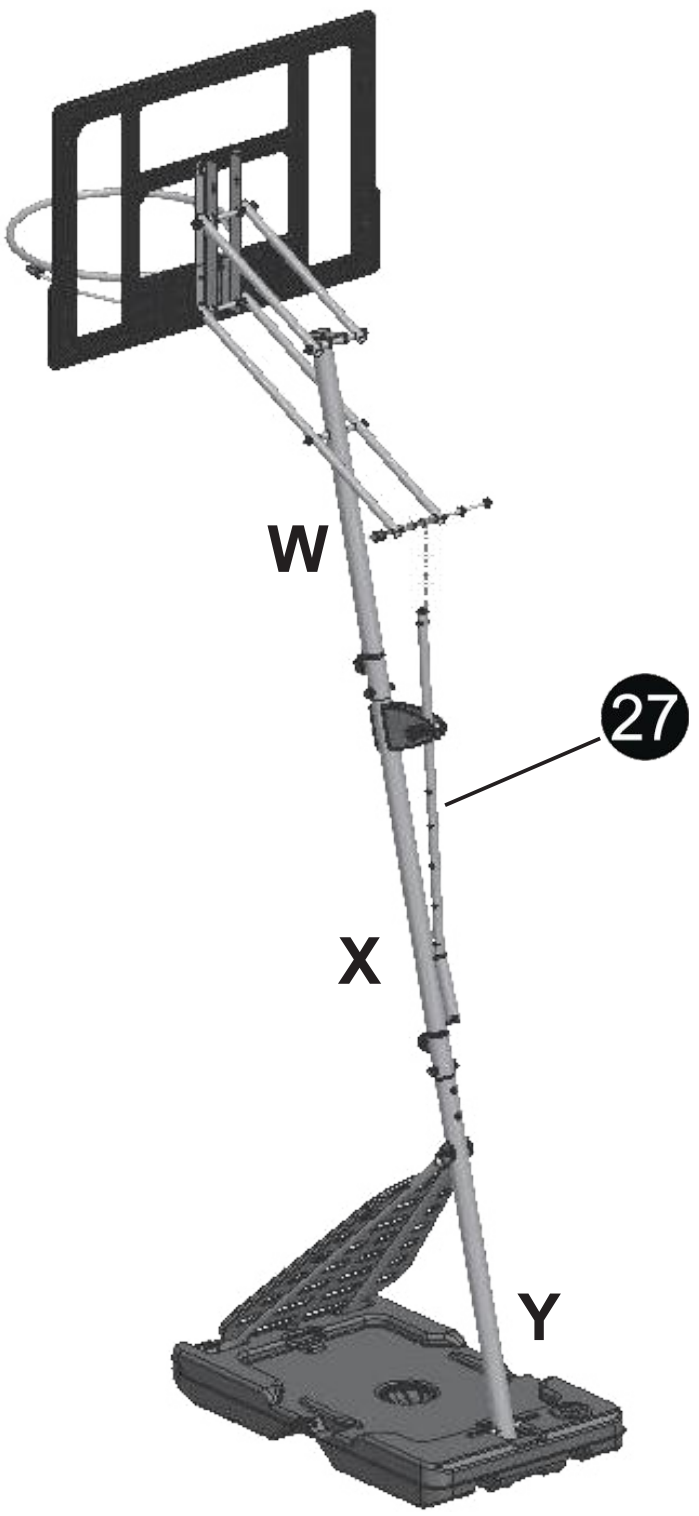

STEP6





INSTALLATION STEPS





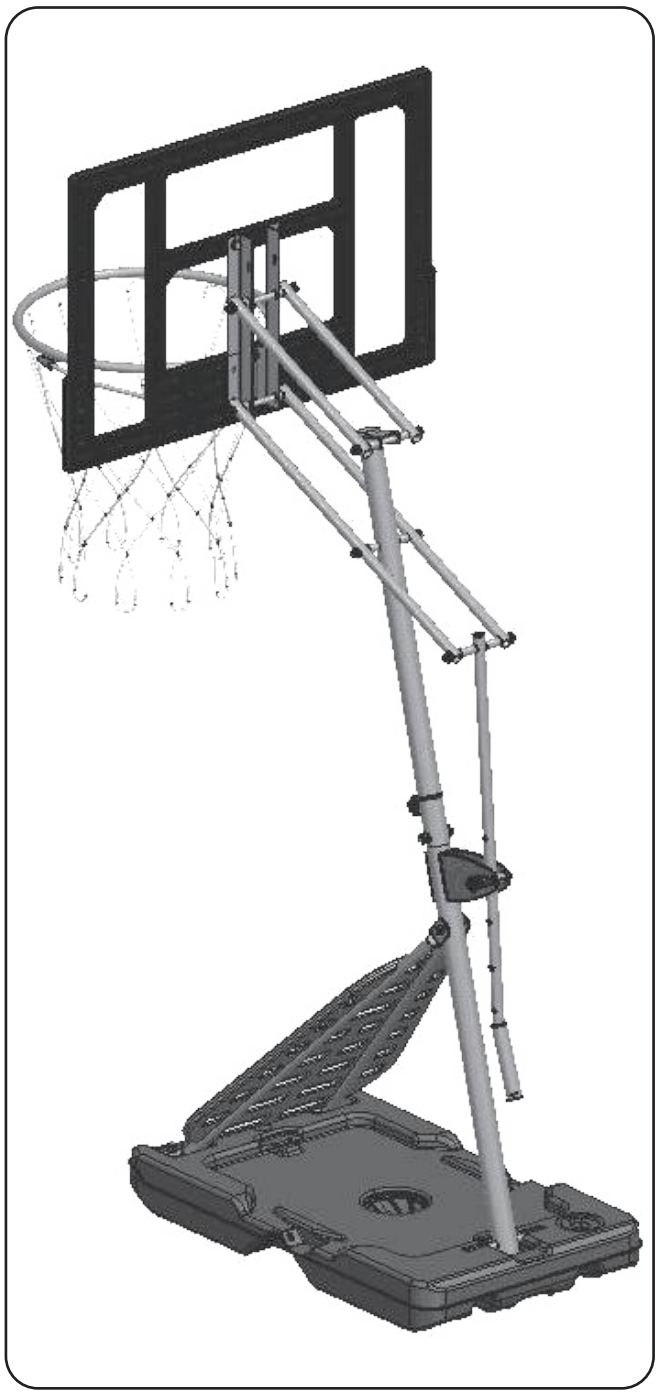

INSTALLATION STEPS